innova
renewing energies

INSTALLATION, USE AND MAINTENANCE

WATER COOLER WITH CONDENSATION EVAPORATIVE CEV +

innova
renewing energies

INDEX

1 GENERALITY

1.1.1 INTRODUCTION

This manual has been designed with the aim to make it as easy as possible the installation and management of your plant.

By reading and applying the tips in this manual, you can get the best performance of the product purchased.

We would like to thank you for your choice with the purchase of our product.

Please read this file before making any operation on 'units.

You should not install the unit, nor perform any intervention on it, if it has come to thoroughly read and understood this manual all its parts. In particular, it must take all the precautions listed in the manual.

The with the documentation supplied must be delivered to the person responsible 'facility should keep it carefully (at least 10 years) for future assistance, maintenance and repairs.

Installation of the unit must take into account both the purely technical requirements for the proper functioning, as well as any local legislation

force that the requirements specifications.

Make sure that the delivery unit, there are no obvious signs of damage in transit. In this case, indicate on the delivery note.

This manual reflects the state of the art at the time of commercialization of the machine and can not be considered inadequate because later updated according to new experiences. The Manufacturer reserves the right to update products and manuals, without any obligation to the previous update, except in exceptional cases.

Contact the Sales Department of the manufacturer for further information or technical documentation updates and to suggest any improvements in this manual. All reports received will be strictly scrutinized.

1.1.2 SAFETY RULES

Recall that the use of products that use electricity and water requires the observance of some fundamental safety rules:

- And 'it is forbidden to touch the appliance with bare feet and with equal of wet or damp body
- The use by children or the lost-it unable unassisted.
- It is forbidden to introduce objects and substances through the intake grilles and man-date air.
- E 'prohibited any operation of cleaning, before disconnecting the appliance from the power supply by placing the mains switch in the off
- And 'it is forbidden to modify the safety or adjustment devices without authorization and instructions from the manufacturer
- And 'Do not pull, detach or twist the electrical cables coming from' unit, even when disconnected from the power network.
- E 'it is forbidden to introduce objects and substances through the intake grilles and air flow.
- E 'it is forbidden to open the doors of access to the internal parts of the appliance, without having first placed the main switch of' plant on off.
- And 'it is forbidden to disperse and leave within reach of children of the' packing material as it can be potentially dangerous.
- Observe the safety distances between the machine and other equipment or structures to ensure a sufficient drive access space for maintenance and service operations as described in this booklet.
- Power supply unit must take place with electrical cables with a suitable section of the 'power unit. The voltage and frequency values must correspond to those indicated for the respective machines; All units must be earthed in compliance with current legislation in the different countries.
- -Not enter R410A into atmosphere: R410A is' a fluorinated greenhouse gas, called in the kyoto protocol, with a global warming potential (GWP) = 2088;

1.1.3 SYMBOLOGY

The symbols shown in the following file, allow to quickly provide information necessary for the proper use of the unit.

Symbols on safety

	CAUTION Only authorized personnel	It warns that the indicated operations are important to the operation of the machine safety
	DANGER Risk of electric shock	It warns that failure to observe the precaution may cause electric shock.
	DANGER	It warns that failure to observe the precaution may cause risk of injury to exposed persons.
	WARNING	It warns that failure to observe the precaution may cause damage to the unit or system.
	DANGER	It warns that there is the presence of moving parts and involves a risk of damage to exposed persons

1.1.4 WARNINGS

	The installation of 'units must be performed by personnel qualified according to the regulations in the various countries. If the installation is not performed could become a dangerous situation
	Avoid installing the unit in wet rooms or in the presence of large amounts of heat.
	On the electrical side to prevent any risk of electrocution, it is essential to disconnect the main switch before making electrical connections and any maintenance operation.
	In the case of all 'inside the unit water spills, place the main switch of' plant to "Off", turn off the taps dell ' water and contact technical service
	It is recommended to use a dedicated power circuit; Never use a power supply in common with other devices.
	It is recommended to install an earth leakage circuit breaker; failure to install this device may cause shock electricity.
	For the connection, use a cable of sufficient length to cover the entire distance, without any connection; do not use extension cords and do not apply other loads on nutrition but use a dedicated power circuit.
	After connecting the cables, ensure that the cables are placed so as not to exert excessive forces on the shell or on electrical panels; any incomplete connection of the covers may cause overheating of the terminals.

⚠	Make sure that it meets the ground connection; not to ground the appliance on the distribution pipes. Overcurrents high momentary intensity may damage the unit
!	Installations carried out outside of the warnings of this manual or use outside of the operating limits will void instantly check the warranty.
!	In case of leakage of water, place the mains switch in the "off" position and close the water taps. Call, with concern, the After Sales Service or a qualified technician and unable to be present on the device.
!	In case the device is connected in parallel to a boiler, during operation of the same, close the taps of the chiller. The circulating water temperature in Inter-no chiller must not exceed 60 ° C
!	Move the main system switch to "off" Close the water valves If there is a risk of freezing, make sure that the system has been added with the antifreeze, otherwise empty the system.
!	Make sure that the first operation is carried out by authorized personnel from 'company (see form required initial startup)

1.1.5 CONFORMITY

The CE marking (present on every machine) attesting conformity with the following European standards:

- Low Voltage Directive 2014/35 / EC
- Electromagnetic Compatibility Directive 2014/30 / EC

1.1.6 RANGE

	-1-	-2-
CEV	010	M

(1) Defines the size of power
From 7 to 15 kW

2) Construction type
M: Single-phase 230/1/50
T: Three-phase 400/3 + N / 50

1.1.7 IDENTIFICATION !

-The unit is identifiable through the label on the front panel of the same lower.

-Sull 'package will be an additional nameplate with the unit's model and shipping references.

The plaque on 'Packaging has no significance for the traceability of the product in the years following the sale.

L 'excision, the deterioration and the illegibility of the nameplate on the unit, involves great problems in the identification of the machine, in the availability of spare parts, and then in all its future maintenance.

1.1.8 MAIN COMPONENTS OF 'UNITY'

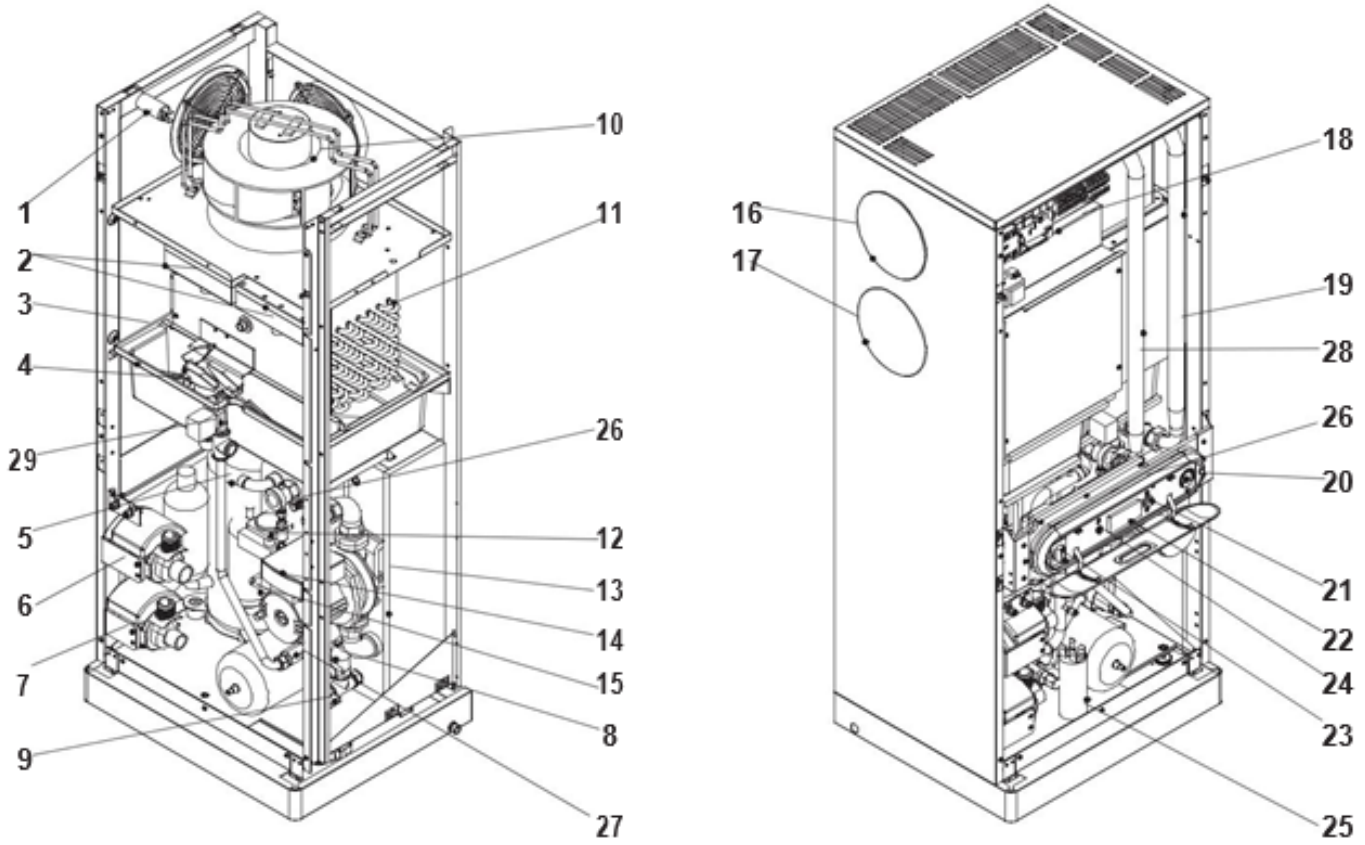

1 Condenser fan
2 Water coolers
3 Bath collection Floats
4 level
5 Compressor
6 Pump recirculation condensation
7 limescale washing pump
8 Safety valve
9 system drain tap
10, evaporative condenser fan
11 12 13 Group Flow internal accumulation,exchanger and expansion vessel
14 Circulation pump

15Safety temperature sensor
16 Exhaust air
17 Intake air
18 Electrical panel
19 discharge water system pipe
20 water pressure gauge
21 summer / winter selector
22 Display Controller
23 Main switch
24 plastic control support
25 ballasts and capacitors Inverter
26 Air vent
27Load / Replenishing plant chilled water return pipe
28 waterworks supply valve
29 .impianto washing

1.1.9 PACKING AND TRANSPORT

The units are supplied to the transport fixed on a wooden pallet and inserted into cardboard boxes. To facilitate travel units are equipped with a wooden pallet and the hooks on the base that allow the lifting and positioning on the site of installation. The unit may be stored in a local protected against weathering at temperatures not lower than 0 ° C, up to a maximum of 40 ° C.

1.1.10 RECEPTION CONTROL AND HANDLING ⚠

The unit is shipped fully preloaded refrigerant gas in the circuits of brine and oil in the compressors. In no case may be water present in the hydraulic circuits, because after testing the unit is carefully emptied. Upon arrival, the customer is required to inspect the unit, even in inland areas to ensure that during transport has not been damaged; the unit left the factory in perfect condition. Otherwise it must have recourse in detail immediately on the conveyor bringing bubble on the extent of damage, producing photographic evidence of apparent damage and notifying any apparent damage to the carrier by registered rr. The manufacturer assumes responsibility for transport damage even if he himself has arranged the shipment. Care should be taken in handling the unit during unloading and positioning in work, so as to avoid damage to the casing and to the most sensitive internal components such as compressors, heat exchangers, etc. Keep anyway the unit horizontally without tilting. All indications about the necessary precautions in order not occur made damage to the unit and the indication of the weight of the same, are shown on the packaging. The materials that make up the package can be of various nature such as wood, cardboard or polyethylene (plastic). It 'a good idea to send the disposal or recycling through specialized companies to reduce their environmental impact. so as to avoid damage to the casing and to the most sensitive internal components such as compressors, heat exchangers, etc. Keep anyway the unit horizontally without tilting. All indications about the necessary precautions in order not occur made damage to the unit and the indication of the weight of the same, are shown on the packaging. The materials that make up the package can be of various nature such as wood, cardboard or polyethylene (plastic). It 'a good idea to send the disposal or recycling through specialized companies to reduce their environmental impact. so as to avoid damage to the casing and to the most sensitive internal components such as compressors, heat exchangers, etc. Keep anyway the unit horizontally without tilting. All indications about the necessary precautions in order not occur made damage to the unit and the indication of the weight of the same, are shown on the packaging. The materials that make up the package can be of various nature such as wood, cardboard or polyethylene (plastic). It 'a good idea to send the disposal or recycling through specialized companies to reduce their environmental impact. They are shown on the packaging. The materials that make up the package can be of various nature such as wood, cardboard or polyethylene (plastic). It 'a good idea to send the disposal or recycling through specialized companies to reduce their environmental impact. They are shown on the packaging. The materials that make up the package can be of various nature such as wood, cardboard or polyethylene (plastic). It 'a good idea to send the disposal or recycling through specialized companies to reduce their environmental impact.

1.1.11 REMOVAL AND DISPOSAL ⚠

Do not disassemble or dispose of the product yourself. The disassembly, demolition, disposal of the product must be performed by authorized personnel in accordance with local regulations.

2 INSTALLATION

2.1.1 INSTALLATION CONDITIONS

The unit must be installed according to national and local rules governing the use of electrical devices and according to the following guidelines:

install the unit within residential buildings with ambient temperature between 0 ° C and 45 ° C;

avoid areas in close proximity to sources of heat, steam, flammable and / or explosive and particularly dusty areas;

choose an installation place where there is enough space around the unit for the air ducts and connections in order to perform maintenance;

the consistency of the wall / floor where the unit will be installed must be adapted to the weight of the unit and does not cause vibrations.

In the environment chosen for the installation must be present:

- connections of the air ducts; electrical connections; connection for the water discharge, connection for water filling, hydraulic connections

2.1.2 POSITIONING UNIT

Floor mounting

First check that the plane on which you will have to place the machine has the necessary characteristics of structural solidity, also taking into account that the machine It can transmit vibrations.
The machine is already equipped with anti-vibration adjustable feet forthe support to the floor.
The hydraulic connections can be made either towards the wall (thus hiding from view below the upper panel) that upward by removing the pretranciata sheet metal part on the panel.

X left side
Y right side
W rear side

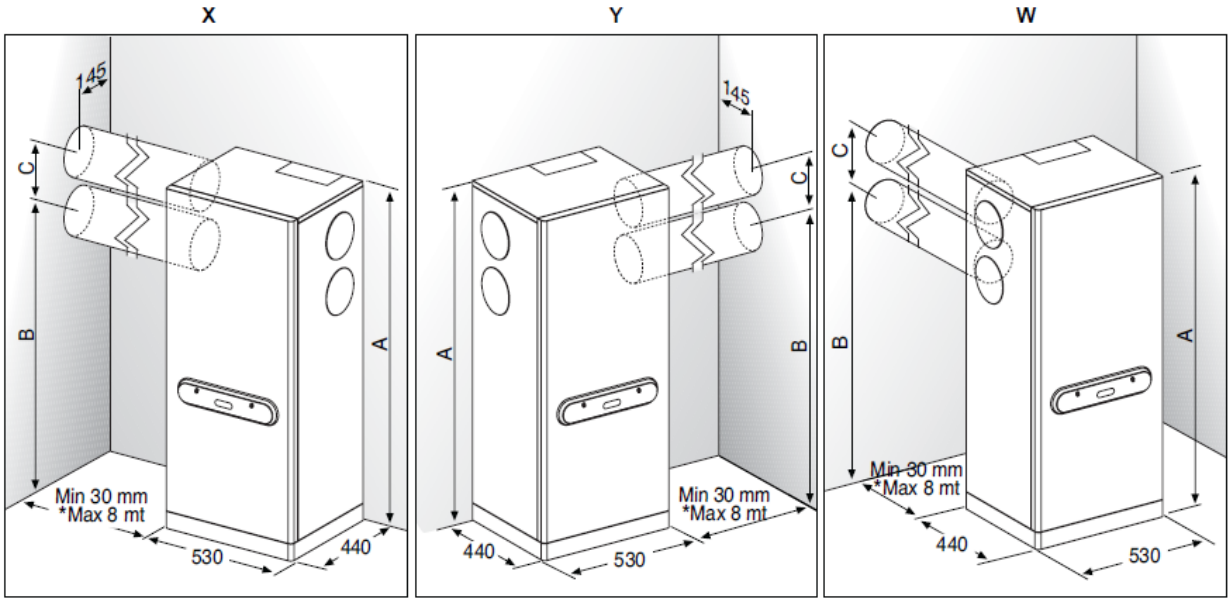

		7/10/15
A		1445,5
B		1081

		7/10/15
A		1445,5
B		1081

		7/10/15
A		1445,5
B		1010

Floor mounting

Wall mounting

The chiller, for its anchorage to the wall, is provided
of the fastening bracket.
It must be chosen for a sufficiently sturdy wall ensure the tightness of the anchoring systems (dowels to expansion etc.) adapted to support the appliance and prevent the transmission of unwanted vibrations.
The weight of the device are shown in section Specifications.
Oversizing sufficiently to take into account the dowels of any small failure due to vibration and possibly traction exerted by the tubes.
For securing the bracket must refer to mounting template.
For the location of the pipes and air hoses refer to fig. reported in the following examples and the template Mounting supplied.
For the eventual hydraulic connection with attacks in part lower are available as two flexible pipe fittings

X left side
Y right side
W rear side

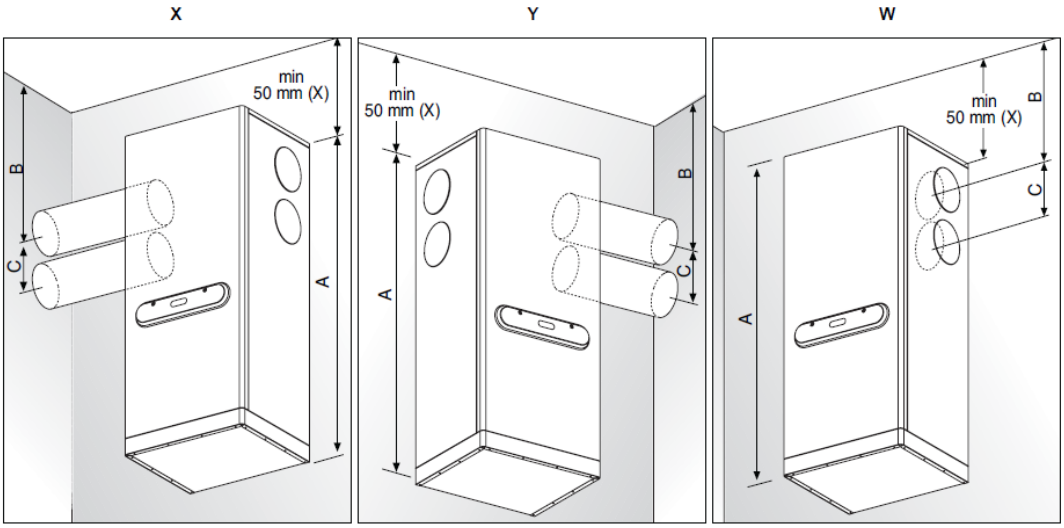

		7/10/15
A	1275	1445,5
B	155,5+X	155,5+X
C	209	209

		7/10/15
A	1275	1445,5
B	155,5+X	155,5+X
C	209	209

		7/10/15
A	1275	1445,5
B	155,5+X	155,5+X
C	280	280

Wall mounting

Wall mounting - Installation of the bottom cover

THE In the case of wall installation in the lower closure panel mounted.
To install the component:
- remove the front inspection panel
- engage the rear part of the closure panel in the appliance base
- secure it before with
3 screws

In supplied to the panel there are 2 plastic caps and a nipple 3/8 "complete with locknut and gasket. In case of installation in environments where the accidental dripping of condensate
from the apparatus may damage the floor recommends mounting the components and connect the drain.
Once carried out the assembly operations of the components perform a watertightness verification.

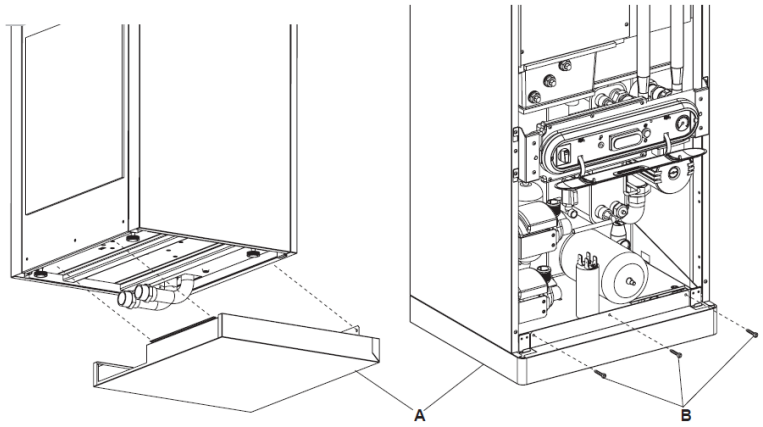

Positioning outside

The appliance must be installed (Whether in a wall or stand) in a well protected from rain and water splashes that might invest. E 'advisable to avoid direct exposure to the sun especially in the area on the control panel. For this type of application must be kept in mind that the plant should be introduced the antifreeze liquid in a fair percentage of the minimum outside temperatures reached (recommended minimum 20% compared to the content total plant). Alternatively, the water must be removed from the machine and from all the pipes placed outside before each winter season. The discharge water from the cooler can be made through the tap placed in the lower part of the inertial vase	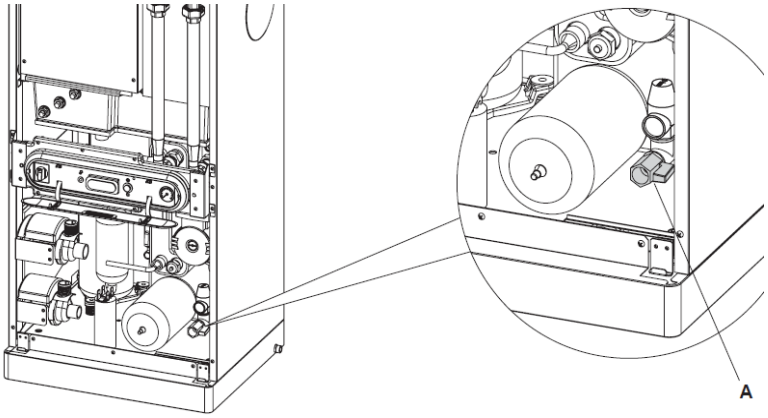

Adjusting legs and mounting unit

For each type of installation it is critical to keep the unit perfectly level to avoid dangerous gradients and water spills; For floor installation, carefully adjust the feet leading to the unit level;	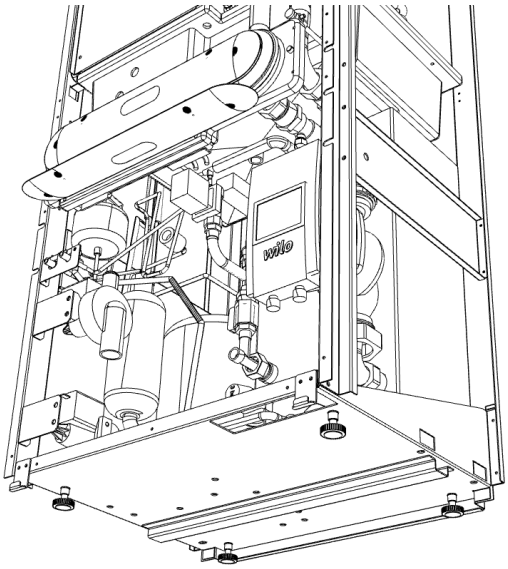

3 AREAULICI CONNECTIONS

3.1.1 GUIDELINES AREAULICI

The unit is provided on three sides (left, right and rear) of two spigots diameter 160mm, for external and eject hot and humid air air inlet;

For the correct connection of the air ducts, refer to the following diagram and the places adhesives unit.

CONFIGURATION VERSION

The minimum diameter of the pipe and fittings must be 160 mm (models 7/10) and 200mm (15 models). The material constituting the pipe must be thermoplastic or otherwise another material resistant to air saturated with moisture.

The eventual rectangular ducts or square must take into account a minimum diameter equal to 0.03 m_2. (7/10 models) and 0.05M_2(15 models)

The maximum linear path of inlet pipes and exhaust air for the condenser must not exceed 8 meters, path linear;

It must take into account that:
- Each sharp bend equals 3,3 linear meters of pipe.
- Each wide-radius turn (min. 300 mm) is equivalent to 1.8 meters.

EXAMPLE If along the way there and present a curve elbow and one with a radius of about 300 mm development maximum of the pipe
It will be: 8-3,3-1,8 = 2.9 m.

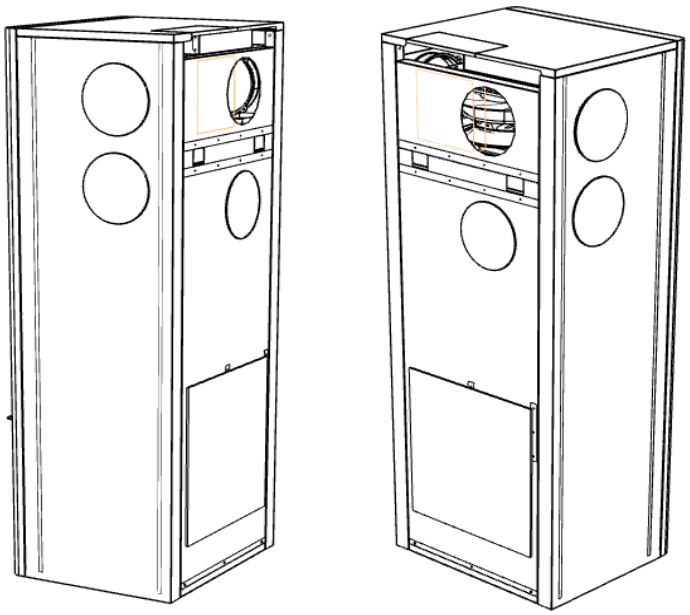

Aerodynamic links

Inside the ejection pipe (upper inlet on the machine) can condense, especially if the pipeline itself through relatively cool environments such as basements or underground garages. For this reason it is necessary that such a pipe is in constant although slight slope towards the chillerto ensure the return of condensation inside the unit. Alternatively you must create drainage points in the valley areas of the holes through with relative drainage pipes to channel any condensate into a drain. The junctions between the various pipe sections and fittings must be properly sealed to prevent water leakage.
The masking of the holes external must be carried out only and exclusively with the dates grids supplied. Other grids not specifically designed may result in high pressure drops resulting in the criminalization of the machine returns. When used in winter seasons or with temperature External below 20 ° C it is necessary to protrude a stretch of pipe inclined downwards to prevent that any drops of condensation from falling on the wall wetting.

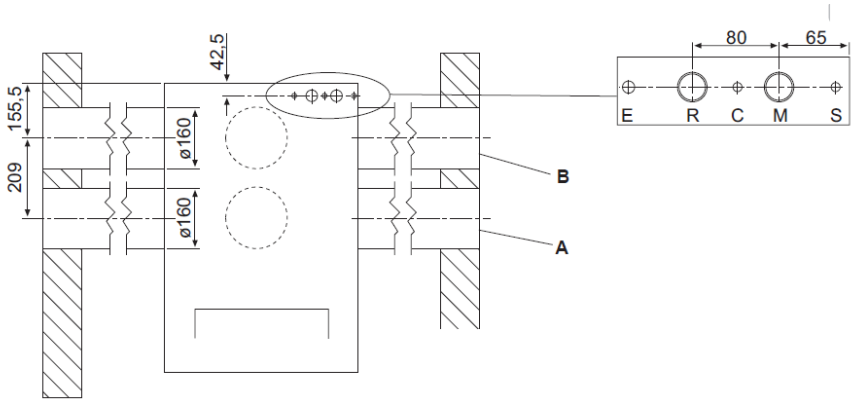

Gradient ejection pipes

4 CONNECTIONS HYDRAULIC

4.1.1 GENERALITY

- The units are equipped;

-Make to respect the flows indicated on the plates: input (incoming water towards the unit), output (outgoing water from the unit)

-Make so that the weight of non-serious piping on the predisposed attacks

-provide shut-off valves on the flow and return pipes to the system

-All chilled water piping must be insulated in order to minimize unwanted exchanges of heat and the formation of condensation.

-First to perform the filling of the pipes, make sure that the same do not contain foreign materials such as sand, stones, flakes rust, welding spatter, slag, etc. Otherwise carry out a washing of the hydraulic circuit by-passing the unit.

-Attention connecting the exhaust pipe of the unit which must provide for an adequate siphon;

-Avoid absolutely cavitation of the pump and the consequent presence of air in the hydraulic circuit.

Physical and chemical properties of 'plant chilled water;

not compatible chemical and physical characteristics could affect the integrity of the hydraulic part of the 'units.

Check water quality;

DESCRIPTION	Limit value
Hardness	<20 ° F
PH value	7.5 / 9
Oxygen	<2 mg / l
Conductivity	<500 uS / cm
Iron	<2 mg / l
Manganese	<1 mg / l
Nitrate	<70 mg / l
Sulphate	<70 mg / l
Chlorine Compounds	<300 mg / l
Carbon dioxide free radical	<10 mg / l
Ammonium	<20 mg / l

4.1.2 POSITIONING AND PROCEDURES OF CONNECTIONS

The hydraulic connections are positioned in the rear of the unit.
The wall must predisposition follow the instructions :
M flow 1 "(1" ¼ size 15)
R return 1 "(1" ¼ size 15)
C Load 1/2 "
S exhaust
IS power supply
The minimum nominal diameter of the connection pipes must be of 1 "(1 1/4" size 15)
To allow the maintenance or repair is essential that each connection
hydraulic both dotato the relevant shut-off valves
manuals.
The maximum pressure allowable losses are those defined in section Features techniques.
It should be necessary prevalences
higher due to high system load losses will have to add a pump
external with relative inertial vessel. The chilled water distribution pipes
They must be adequately insulated with polyethylene foam or similar materials of a thickness of at least 13 mm. Also the shut-off valves, curves and various fittings must be adequately insulated.
To avoid air pockets inside the circuit strongly we recommend that you put automatic or manual venting devices at all points
(Highest pipelines, siphons etc) where the air can accumulate. Always check the temperature difference between flow and return lines - which must be
between 4 ÷ 6 ° C
In accompanying this unit is present in a sieve with mesh of 0.4 mm. Install it on the water inlet pipe of the appliance (return
plant).
If the mains pressure is greater than 3 bar, install a pressure reducer on the load.
If the system is a boiler for heating in winter it will be necessary to install an automatic or manual 3-way valve capable
to divert the flow of water from the cooler to the boiler and vice versa or a non-valve return (available as an accessory).
The positioning of the free water drain must remain below the upper wire unit.

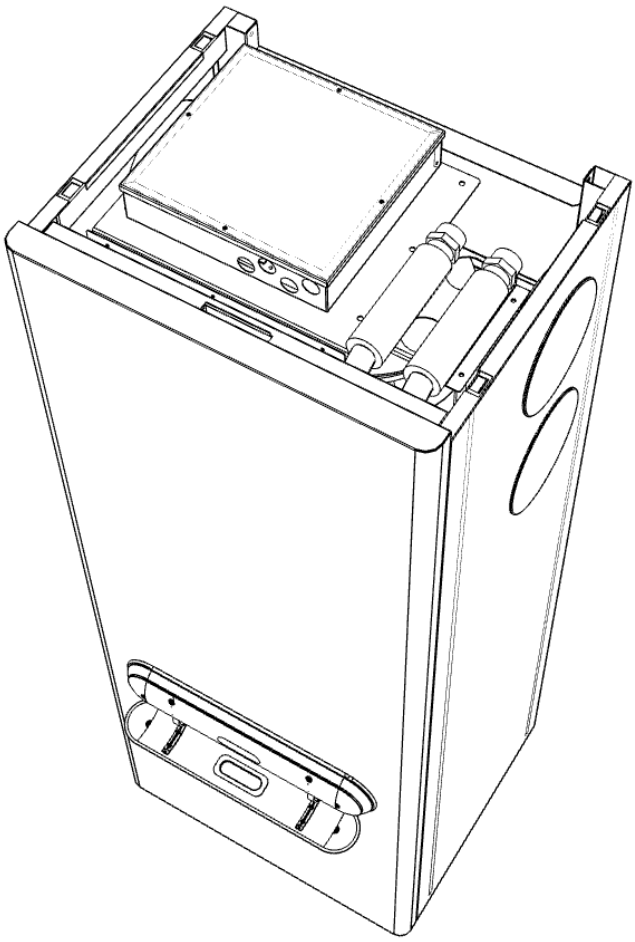

S) Of unloading the condenser water washes.
M) From the machine water outlet
(Heating medium flow)
C) Of water filling point
(Both for chilled water distribution system for both capacitor plant washing).
R) Water into the machine
(System return).

To install water filter on
inlet pipe.
Failure to observe this
It can cause irreparable damage
evaporator plates.

IS) Electrical connections

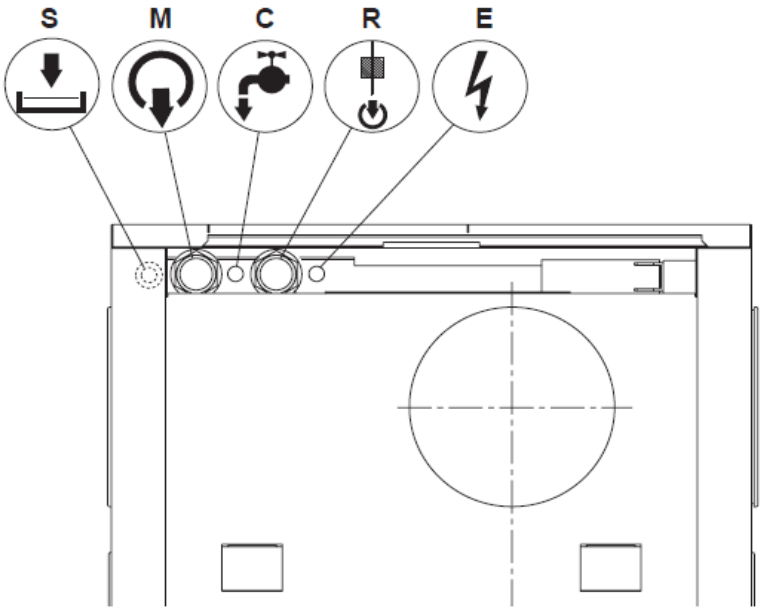

4.1.3 HYDRAULIC SCHEME

1 Pressure gauge system
2 The flexible connection
3 Shut-off valve
4 Mesh filter *
5 Flow
6 Plate heat exchanger
7 Chilled water system pump
8 Safety valve (3 bar)
9 Air vent
10 Expansion tank
11 Temperature probe
12 Load / refrig plant Replenishing water.
13 Tap exhaust system refrig water.
14 Differential pressure switch
15 accumulation of water chilled Vase
16 alimentaz.impianto Flushing valve
17 evaporative Condenser
18 Softener (to be fitted by the installer)
19 Check valve (to be installed
only in systems with several devices in parallel)

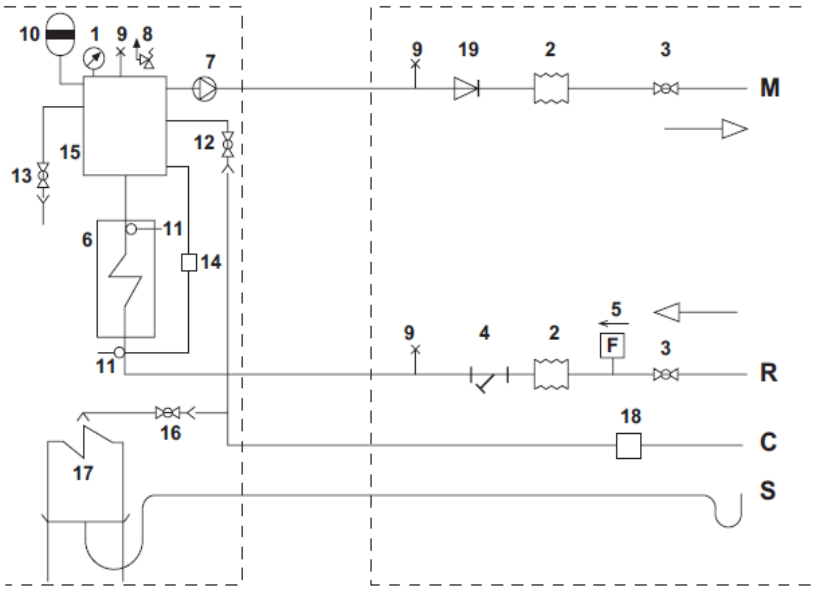

4.1.4 AUTOMATIC WASHING FUNCTION AND QUALITY 'WATER

In order to avoid large formations of limestone, which would decrease the efficiency of machine, the cooler is equipped with a pump which, at time intervals between 30 minutes and 6 hours, depending on the water hardness, stops the machine and performs a washing exchanger, a water collection tank and piping. The action of these washings, it restricts the formation of limestone deposits and lengthens considerably the interval of time between maintenance and the other. The washing sequence involves the following operation: - Stop the compressor; - discharge capacitor bath water - wash cycle; - restart the compressor. During the wash cycle the system circulation pump remains in operation. All the sequences set forth above are carried out automatically by the electronic card; In the first phase of start-up, the service technician will have to detect the water replenishing reference values with the appropriate test kit.	

If the total hardness is less than 20 ° F water and reference values are within the limits stated: -Setting up through the installer menu to the hardness value of the parameter PC76 controller; **PC76 =** Hardness (in French degrees) From minimum 4 ° F to 20 ° F max; **A value that will adjust the frequency of washes during the operation of the unit;** of well water or groundwater are not from the aqueduct should always be carefully analyzed and in case conditioned with appropriate treatment systems. In case of installation of a softener in addition to follow the prescriptions of the manufacturer, to adjust the hardness of the output is not below 5 ° F (performing also test the pH and salinity) and verify the concentration of chlorides in output after the regeneration of the resins	**make-up water setpoints** pH: 6.5 ÷ 7.8 Electrical conductivity: between 250 and 800 seY / cm Total hardness: between 5 and 20 ° F Total iron: less than 0.2 ppm Manganese: less than 0.05 ppm Chlorides: less than 250 ppm Sulfur ions: Ions absent ammonia: absent

4.1.5 CONNECTING THE EXHAUST PIPE

In order to periodically expel the salt-rich water contained in the bowl placed under the evaporative condenser, the apparatus is
It equipped with an exhaust system that includes a pump and a pipe to be connected to a drain.

This pipe is positioned inside the device so that at least a part thereof is in the upper part of the machine, at a higher level with respect to the bath water.
This arrangement serves to prevent the continuous outflow of water in the case that the connection of external exhaust is lower than the level of the basin (which is located approximately at half height relative to the apparatus).

The diameter of the discharge fitting by pr edisporre mm is equal to 22. In the case of discharge into the sewage system, it is recommended to provide a siphon to prevent the return of unpleasant odors into the room. The siphon curve must be lower than the tray of at least 1.5 m. One must also take into account that the water discharged may be present
of solid residues (pieces of limestone or other small sediments), therefore, the pipes must not have inside them points where these residues can stop.

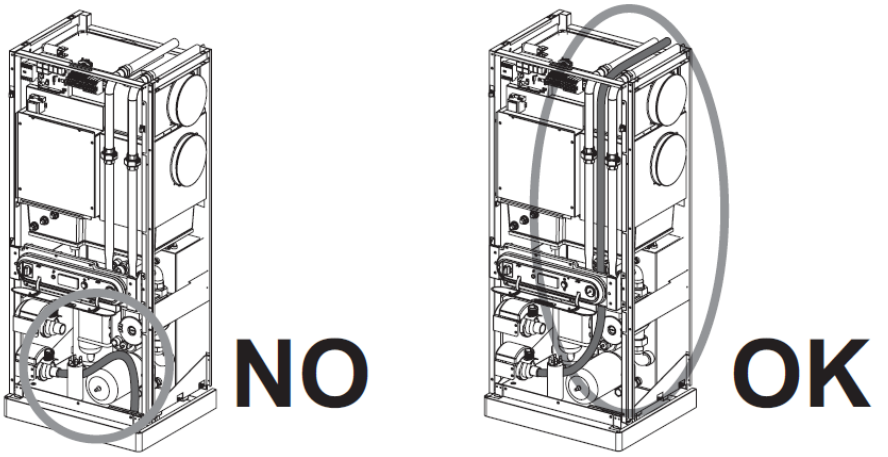

4.1.6 FILLING THE SYSTEM

Once you terminated the hydraulic connections necessary to proceed to the filling plant
using the corresponding tap inside the front panel;
Simultaneously with this it is necessary to vent the air inside the piping and apparatus by means of the hygroscopic valve
During all these operations the machine must be disconnected from the mains electricity.
If an external auxiliary pump is used the same should be off.
The system operating pressure must not exceed 1.5 BAR pump is switched off. In any case, to check for any leaks in the system at the time
testing is recommended to raise the test pressure to be downloaded later to reach the operating pressure

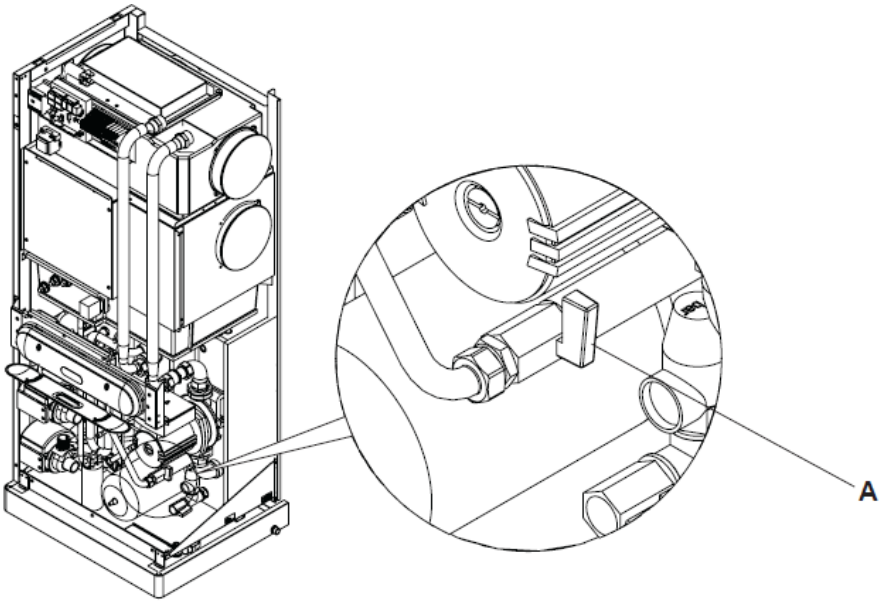

Once you terminated the electrical connections and activated the circulation pump check they are not yet present
residual air.
If this were to happen you have to stop several times the pump and vent again. To avoid dangerous cavitation that could damage the pump and make it less
efficient the whole appliance, the suction pressure, with the pump turned on, measurable by the pressure gauge on the appliance, it must not be less than 0.6 BAR.

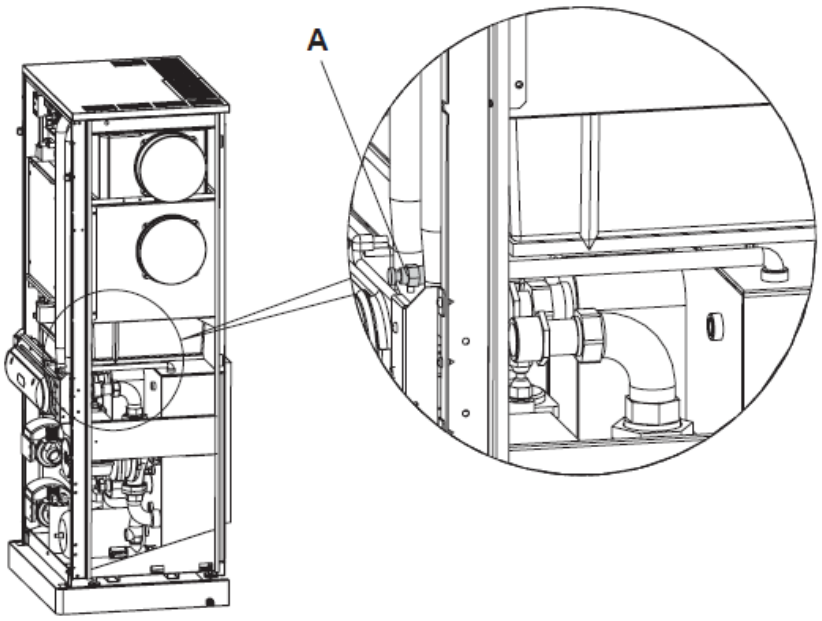

5 ELECTRICAL CONNECTIONS

5.1.1 GENERALITY'

-First starting any operation to make the electrical connection to make sure that the unit is not electrically supplied

-Perform electrical connections required exclusively by consulting the wiring diagram attached to this manual.

-Install a suitable interrupt and protection device to exclusive service differential unit.

-it is essential that the unit is connected to an earthed socket.

-Make that the electrical components selected for the installation (main switch, circuit breakers, cables and terminal section) are suitable for installed unit electrical power and which take account of the compressor inrush currents as well as the maximum attainable load. The related data are indicated on the wiring diagram and on the unit nameplate

-It is forbidden to enter the electrical wiring in the unit except where specified in this booklet.

-Use cables and electrical conductors of appropriate sections and comply with current regulations of the various countries.

-Avoid absolutely to pass the electric cables in direct contact with pipes or components within the unit

-Verify after the first moments of operation the tightening of the screws of the power terminals

Table for the dimensioning of the power line

		007M	***010M***	***010T***	***015T***
Supply	V / Ph / Hz	230/1/50		400/3 + N / 50	
Current consumption max	TO	18	26	9	18

5.1.2 POSITIONING AND PROCEDURES OF CONNECTIONS

The electrical connections are located with a dedicated terminal in the top of the unit;

On the terminal connections are present in terms of supply unit control;

IS) Electrical connections

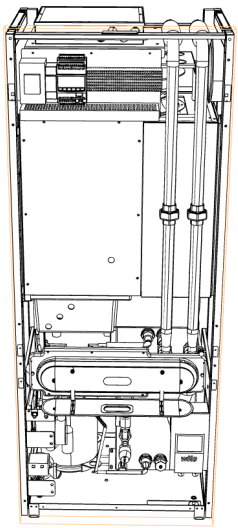

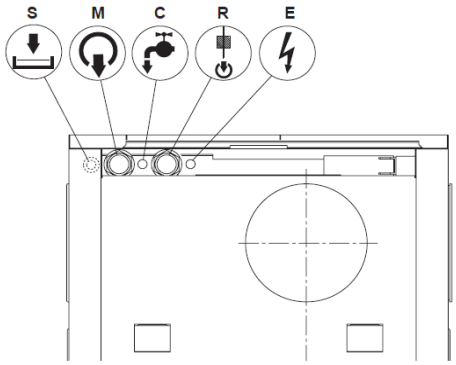

5.1.3 WIRING UNIT

MODELS 007/010 PHASE

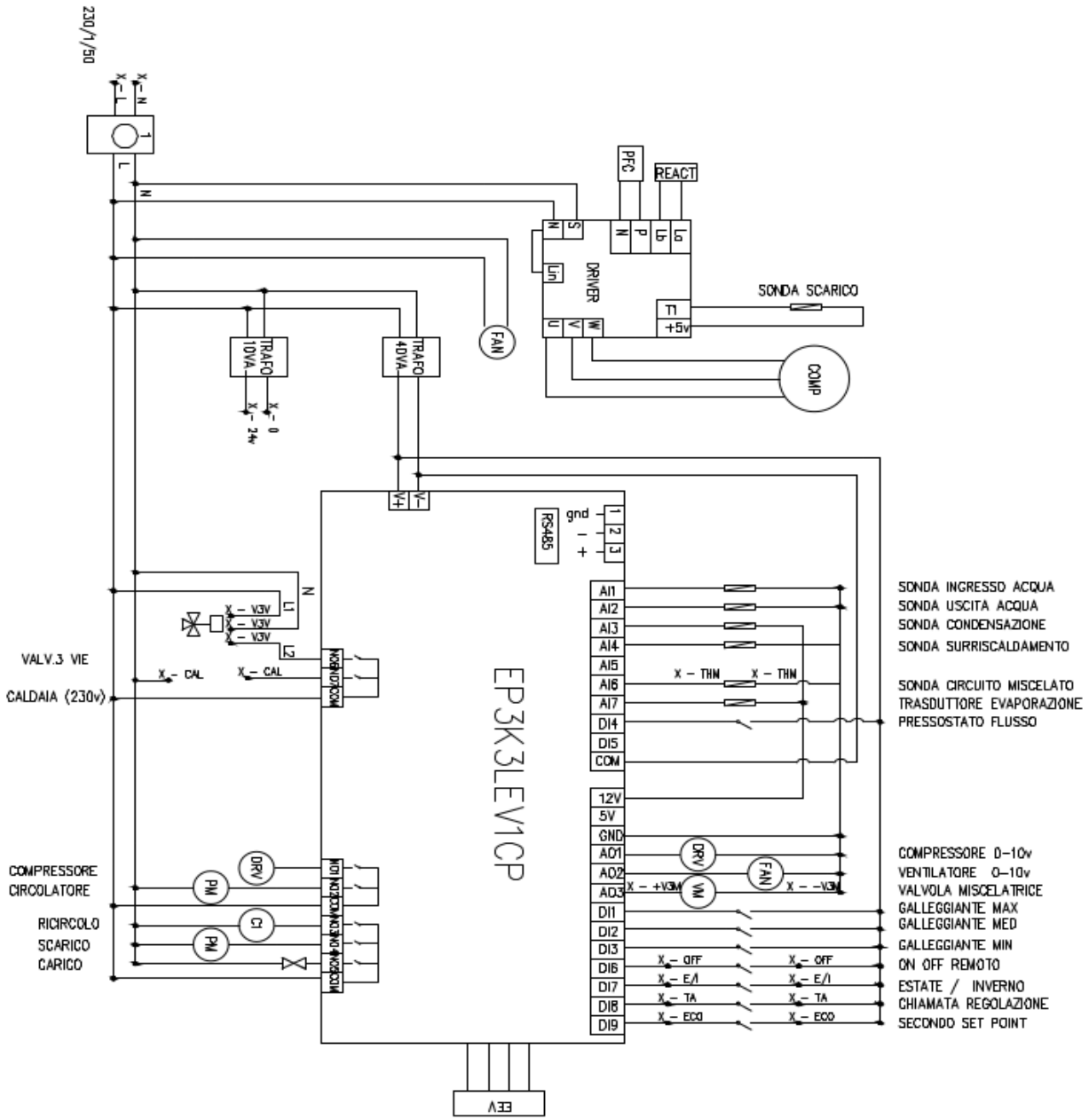

TERMINAL

ALIMENTAZIONE	INGRESSI	GESTIONE MISCELA	GESTIONE INVERNO
L	OFF	THM	CAL
N	OFF	THM	CAL
	E/I	24	V3V L1
	E/I	0	V3V N
	TA	gnd	V3V L2
	TA	Y	
	ECO		
	ECO		

MODELS 010/015-PHASE

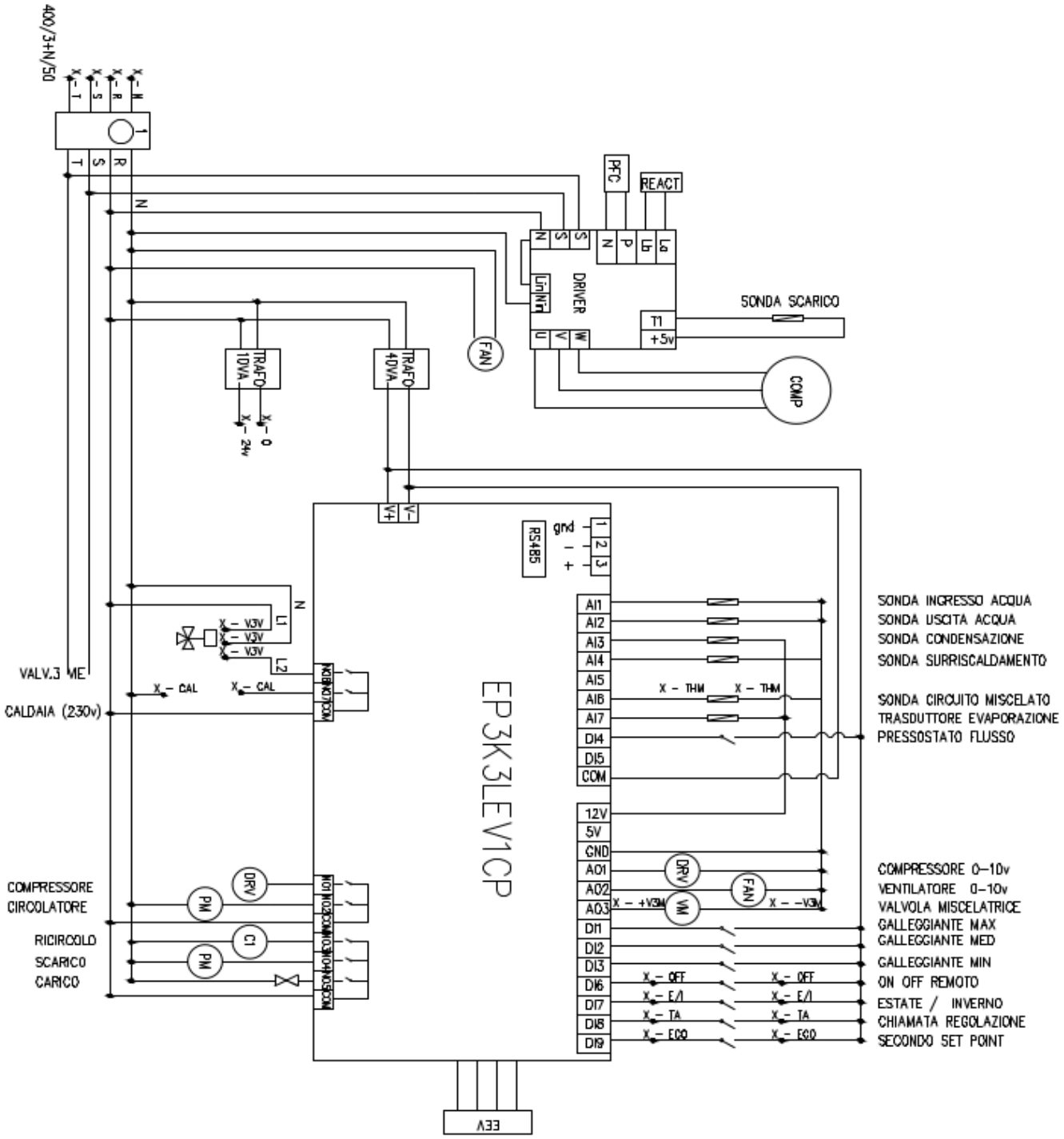

TERMINAL

ALIMENTAZIONE	INGRESSI	GESTIONE MISCELA	GESTIONE INVERNO
R	OFF	THM	CAL
S	OFF	THM	CAL
T	E/I	24	V3V L1
N	E/I	0	V3V N
	TA	gnd	V3V L2
	TA	Y	
	ECO		
	ECO		

TERMINAL CONNECTIONS		
LN / RSTN	Supply	
OFF	On remote control off	Contact closed / Unit ON
E / I	Operation Summer / Winter	Contact closed / Winter Drive
TA	Control Room thermostat	Contact closed / adjustment Activation
ECHO	Command second set point	Contact closed / second set point active
THM	Probe mixed circuit	10k NTC probe
24-0 - gnd - Y	Valve mixed circuit	Power and signal 0-10Vdc
CAL	boiler control	Command to 230v
V3V	3-way control valve	Valves 3-way active in summer mode

5.1.4 ELECTRICAL CONNECTIONS VERSION

Auxiliary Connections

The card is used to enable and disable certain functions of the unit through external commands.

LINK ON / OFF UNIT 'REMOTE

The on-off remote, allows to turn on or turn off the unit through a clean electrical contact. Contact closed = unit ON		
	Clamps	Recommended cable 2x0,5mm = / 2 x 0.75mm
	Remote Command on off	

CONNECTION SUMMER / WINTER

Summer - Winter remotely, allows changing the season and the operating logic of 'unity through a dry contact. Contact closed = unit WINTER		
	Clamps	Recommended cable 2x0,5mm = / 2 x 0.75mm
	Winter summer Command	

CONNECTION REQUIRED THERMOSTAT TA

E 'can be connected to a room thermostat, which provides for activating the unit both in summer and in winter; In the summer, with closed contact, it will check the set point and possibly activate the compressor; In winter, with closed contact, will activate the boiler exit;		
	Clamps	Recommended cable 2x0,5mm = / 2 x 0.75mm
	room thermostat control	

CONNECTION CONTROL ECO

The unit provides through a command, the set point change; This can be used for energy saving functions; Here you enter the set point which will be considered when the ECO command will be activated: The default values are; Eco Set point = 18 ° Contact closed = trigger second set point		
	Clamps	Recommended cable 2x0,5mm = / 2 x 0.75mm
	echo Command	

PROBE CONNECTION THM Mixer circuit

<table>
<tr><td rowspan="3">The unit is supplied and connected in the terminal, a ntc probe, which allows to detect and manage the temperature of a mixed circuit both in summer and in winter;
The probe must be placed on the discharge side of the mixer circuit;
The summer and winter set point of the mixer circuit can be modified;
The default values are;
Winter set point = 35 °
Summer set point = 18 °</td><td>  </td><td>  </td></tr>
<tr><td>Clamps</td><td>Recommended cable 2x0,5mm = / 2 x 0.75mm</td></tr>
<tr><td colspan="2">mixer circuit sensor Command</td></tr>
</table>

CONTROL VALVE 0-10v Circuit Mixed

<table>
<tr><td rowspan="3">The unit provides for the control of a valve to manage a mixed circuit;
The valves must be with 0-10Vdc command

If the valve is a 3-wire connecting valve;
= + 24v power supply
0 = Power and Gnd -
Y = Signal 0-10Vdc

If the valve is a 4-wire connecting valve:
= + 24v power supply
0 = Power -
Gnd = reference signal
Y = Signal 0-10Vdc</td><td> 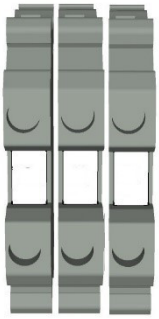 </td><td>  </td></tr>
<tr><td>Clamps</td><td>Recommended cable 3x0,75mm = / 3 x 1mm</td></tr>
<tr><td colspan="2">Connection valve mixed circuit</td></tr>
</table>

CONNECTING BOILER

The unit provides the command of a boiler in winter mode; The boiler is activated, only in winter mode and with command TA (room thermostat) closed; CAUTION : Voltage output The boiler output provides a '230v output voltage;		
	Clamps	Recommended cable 2x0,5mm = / 2 x 1.5mm
	boiler control	

CONTROL VALVE 3-WAY SUMMER / WINTER

The unit provides the control of the three-way valves for the seasonal change chiller / boiler; In winter mode, it turns off the output for the command of summer / winter switching valves; The command is a command for on off valves 230v with 2-point control with logic; Valves On = Summer Off Valves = Winter connect ; N - Neutral L1 - Voltage always present L2 - Opening control	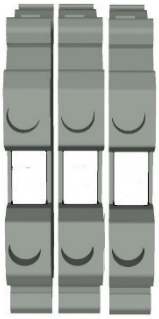	
	Clamps	Recommended cable 3x0,75mm = / 3 x 1mm
	Connection 3-way valve summer / winter	

6 COMMISSIONING AND METHOD 'FOR USE

6.1.1 PREPARING TO START UP

The initial commissioning of the chiller must be carried out by the Technical Service Assistance. Before chillers Service make sure that: - All safety conditions have been met. - The chiller is adequately fixed to the support surface. - Both of been respected. - The hydraulic connections have been carried out in the instruction manual. - The hydraulic system has been filled and vented. - The hydraulic circuit shut-off valves are open. - The electrical connections have been made properly. - The voltage is within a tolerance of 10% of the nominal unit. - The three-phase power of 10.e TKW model 15 has a maximum unbalance between the phases of 3%. - The grounding is carried out correctly - The tightness of all electrical connections have been well executed - The power supply cables section is adequate absorption device and the length of the connection performed - The procedure for adjusting the water hardness has been performed and the potentiometer on the washings card is correctly positioned.	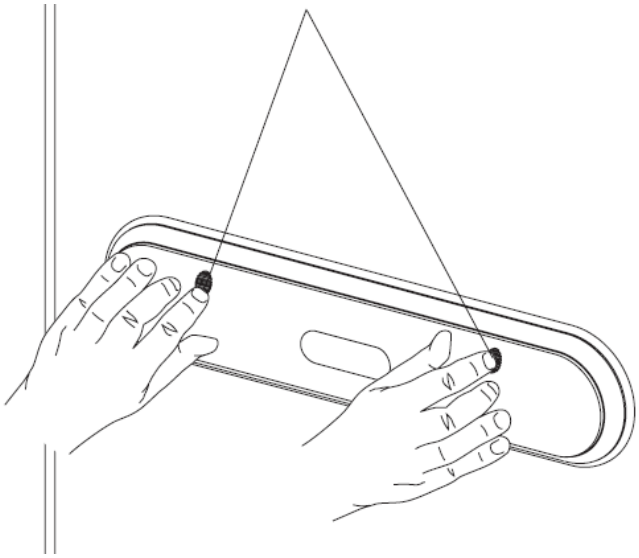
	Preparation for commissioning

6.1.2 FIRST TIME

Move the main system switch to "on." - Turn the unit switch to the position ON. - At this point, the instrument carries out a discharge and loading cycle until the float water level contained in the drip tray. - Ensure that the display is lit and indicates the return water temperature. The user must then carry out the operations of ACTIVATE and DEACTIVATE operand acting on the control panel or remote switch (if present). For the position of the internal components refer to Chapter schemes "for information the installation. "	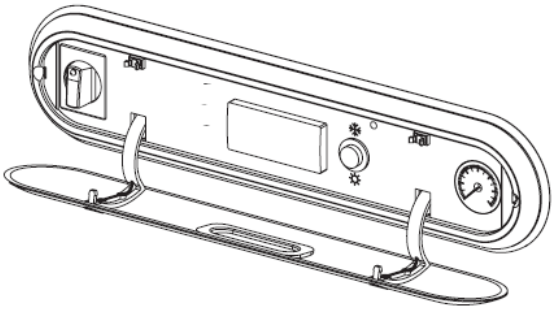
	Commissioning

6.1.3 CHECKS DURING AND AFTER THE FIRST COMMISSIONING

For start-up carried out is necessary to check and detect:

- Verify that during the operation of the electric voltage corresponds compressor
to the nominal value + / -10%.
- Check that the three-phase power models 10/15 has a maximum unbalance between the phases of 3%.
- Check that the noise level of the three-phase compressor models not 10/15
It is abnormal, in this case invert between them two power stages.
- The device operates within the recommended operating conditions (see
Postal Code. "technical features").
- The hydraulic circuit is completely
vented.
- The chiller performs a stop and the following restart.
- Check that the temperature difference between flow and return is between 4 and 6 ° C visible on the display;
- Check the correct positioning of the input probe, making sure that the temperature displayed on the display by the controller is consistent with the temperature the water entering the chiller.

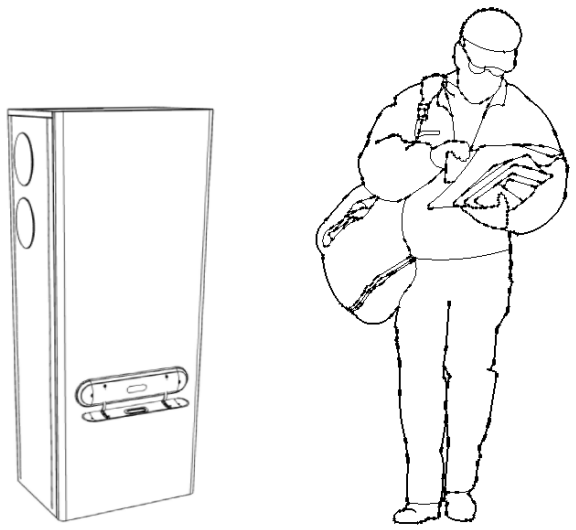

Checks before commissioning

6.1.4 OPERATION ELECTRONIC CONTROL UNIT

6.1.4.1 DESCRIPTION AND START

The system is composed by a metallic structure, which encloses within a series of all the operating organs panels. From the outside it is accessible only panel Commands. The panel includes the following devices:

A The general instrument cut.

B The controller that regulates and coordinates all major functions of the device.
This device allows the regulation and control of all the main functions unit. In normal operation it is displayed on the display the temperature of the water inlet and outlet to the chiller;

C The summer / winter button. Using the button you can choose the summer mode (chiller active and boiler off) or winter mode (chiller off and boiler active).

D The gauge that displays the water system pressure. It allows you to verify the correct water pressure inside the circuit.
The values must be within 1 to 2 bar.

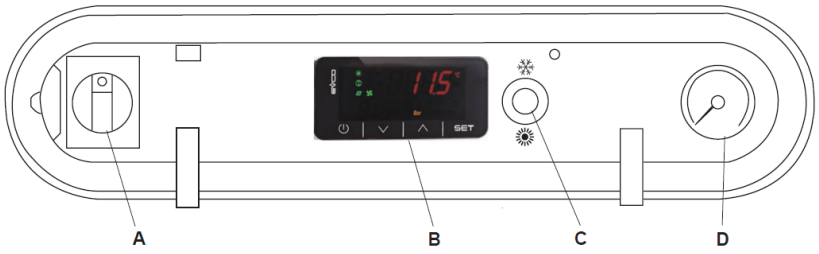

Structure control panel unit

6.1.4.2 KEYS AND SYMBOLS OF ELECTRONIC CONTROL

User interface
The interface is a 72x36mm interface with capacitive touch keys;
The interface allows to perform all operations related to the use of the instrument and in particular of:
- Set the operating mode;
- Manage the alarm situations;
- Check resource status.

In addition to what is described in this chapter are possible many other settings that involve a thorough knowledge of the device and the plant to which it is connected to avoid serious damage to the chiller

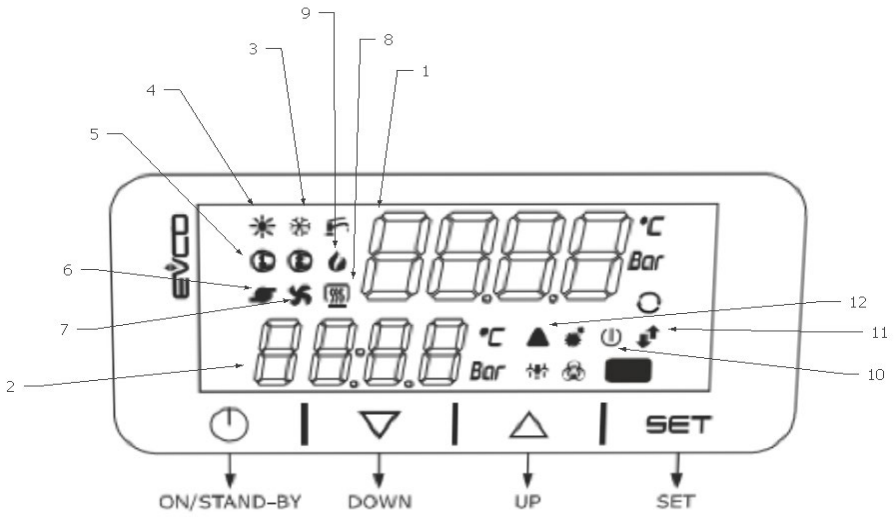

control panel Structure

ICONS AND DISPLAY CONTROLLER			
1	Water inlet temperature	7	Fan ON
2	Water outlet temperature	8	boiler ON
3	Summer operating mode	10	On off tool
4	Winter operating mode	11	Data transmission Can bus to the controller
5	Compressor ON (timing flashes)	12	alarm Presence
6	pump ON		

6.1.4.3 POWER ON

-The unit can be activated via the control panel; Hold for 3 seconds, the ON / OFF button and wait for the display appears water temperatures; If the external contact ON / OFF is open, it will not be possible to enable and disable the operation of the unit via the display; In this case, under the word OFF shows the message OF;	
	
	control panel Structure

6.1.4.4 SETTING THE SET POINT

-The set point of the water cooler may be modified: 1 Press the Set button to enter the general menu; 2 Press the Set button to enter the user menu; 3 Press the lower arrow key to scroll through the user menu; 4 The SPC1 value is the set point of the chiller control; 5Press Sets and set according to the desired value by increasing and decreasing with the arrow keys; 6 Confirm with the set key the desired value; To exit, press the power key;		
		
	Setting Set point	

6.1.4.5 SEASONAL CHANGE

-The unit can change the seasonal logic, for driving in winter one or two switching three-way valves and a command for a boiler, which is activated in accordance with the room thermostat call as described in the paragraph of the electrical connections;

Hold for 3 seconds, the ON / OFF button and wait for the display appears water temperatures;

If the external contact ON / OFF is open, it will not be possible to enable and disable the operation of the unit via the display; In this case, under the word OFF shows the message OF;

Logic symbols:

WINTER

SUMMER

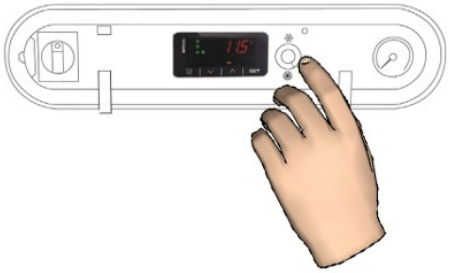

control panel Structure

6.1.4.6 DISPLAY STATES

-It will be able to view all of the states' operating units:

1 Press the Set button to enter the general menu;

2 Press the arrow tastp low, get up to Stat menu;

3 Press Set to enter the Stat menu;

In Stat menu it will be possible to display all of the following values listed in the table below scorrendoli with the pressure of the low-arrow key or arrow high;

To exit, press the power key;

Display States

LIST DISPLAY UNIT STATES - MENU STATES						
Mode	Mode of operation	chiller Summer / Winter PDC		AuH1	analog output valve State / mixer circuit	%
SPC1	Set point Chiller	° C		Tin	Water inlet temperature	° C
Unit	State units	On / Off		tout	Water outlet temperature	° C
CMP1	compressor State	On / Off		pCon	Condensing Pressure	Bar
INC1	Compressor Power State	%		TCON	temperature Condensation	° C
Fan1	fan status	On / Off		Peva	Evaporation Pressure	Bar
INF1	State fan power	%		Teva	temperature Evaporation	° C
PmPu	circulator State	On / Off		TSuc	Temperature Compressor suction	° C
PMPs	Drain Pump status	On / Off		AuH1	Flow temperature mixer circuit	° C

6.1.4.7 SETTING TIME AND DATE

-E 'can set a date and time;

1 Press the Set button to enter the general menu;

2 Press the lower arrow key to go to the RTC menu;

3 Press the set button;

4 Set with the set key and the arrows high and low values of date (month - day - year) and time (12h format);

6 Confirm with the set key the desired value;

To exit, press the power key;

Set Time and Date

6.1.4.8 MENU MAINTENANCE / INSTALLER / MANUFACTURER !

-Esistono 3 menu levels to set additional parameters; The 'menu can be accessed exclusively by authorized personnel; 1 Press the Set button to enter the general menu; 2 Press the lower arrow key to get to the desired menu including: MAIN - Maintenance INST - Installer COST - Manufacturer 3 Press the enter button to enter the desired menu; This will require a specific password for each menu; 4 Press the set button and set to the desired value by increasing and decreasing with the arrow keys; 5 Confirm with the set key the desired value to access the menu; To exit, press the power key;		
		
	Menu maintenance technician, installer, builder;	

6.1.4.9 PRESENCE AND RESET ALARM

-The unit provides for the control and eventual display of a series of alarms; Should an error occur, the unit displays the alarm symbol in the display and alarm function block partially or completely the loads and may interrupt the operation; To exit, press the power key;		
		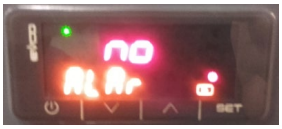
	Presence and an alarm reset;	

7 MAINTENANCE

To always ensure the proper and optimal operation of the unit, it is necessary to periodically perform all maintenance interventions.

7.1.1 PERIODIC MAINTENANCE

The periodic maintenance is essential for maintaining
the ever-efficient refrigerator, safe and reliable in
time. It may be carried out every six months, for some interventions
and annually for others, the Technical Assistance Service, which is technically enabled
and prepared and can also have, if necessary, original spare parts.
The maintenance plan that the After Sales Service must
observe annually, it provides the following operations and checks:
- Check pressure of the expansion vessel.
- Filling of the water circuit
- Air in the water circuit.
- Efficiency securities.
- Power supply voltage.
- Power consumption.
- Tightness of electrical connections.
- Condition of the compressor contactor.
- Cleaning of fan grills.
- no water leakage occurs.

Check for accumulations
of limestone inside the evaporative condenser.

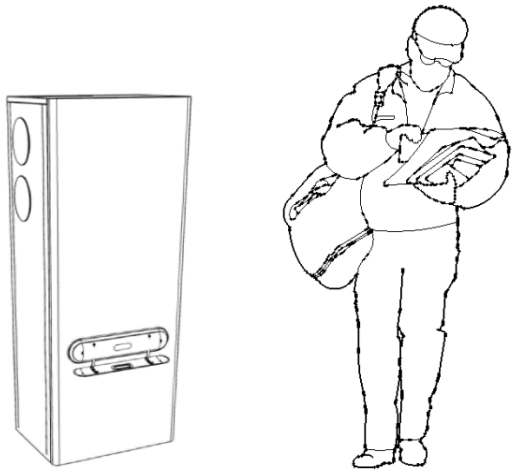

periodic Maintenance

7.1.2 SHUTTING DOWN FOR LONG PERIODS

The non-use of the chiller for a long period involves the execution of the following operations:
• Disable the chiller, in any mode of operation has, acting on the CONTROLLER.
After switching off the appliance:
• Deactivate the indoor terminal units by placing the switch of each unit to "off."
• Move the main system switch to "off".
• Close the water valves.
If the outside temperature can drop below zero; there is danger of frost. The plant
Hydraulic must be emptied, or it must be added with antifreeze
(Eg ethylene glycol) in the doses recommended by the manufacturer of the liquid.
It is suggested to consult the After Sales Service.
To restart the chiller, after stopping for a long time, do
attend the After Sales Service.
In case the device is connected in parallel to a boiler, during operation of the same, close the taps of the chiller. The temperature of the water circulating inside the chiller must never exceed 60 ° C.

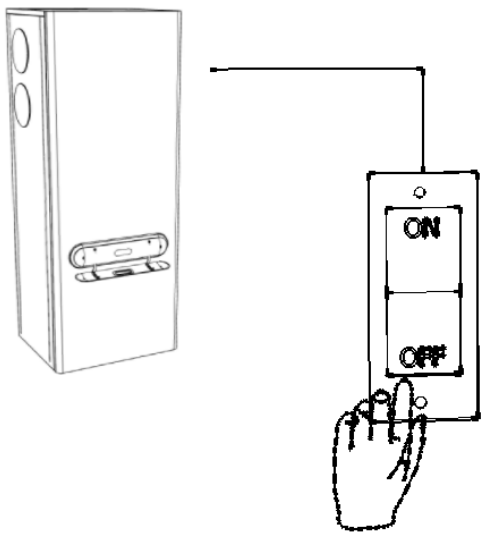

long periods Shutdown

7.1.3 GENERAL CLEANING UNIT '

The only cleaning operation needed by the plant manager, is
that of the external paneling of the chiller, to be carried out only with cloths moistened with water and soap.
In the case of stubborn stains moisten the cloth with a mixture of 50% water and
denatured alcohol or products
specific.
After cleaning, dry the surface.
Do not use sponges soaked abrasive products or powder detergents.
E 'it is forbidden any cleaning operations before having disconnected the power supply device, positioning the switch
General switch on "off"

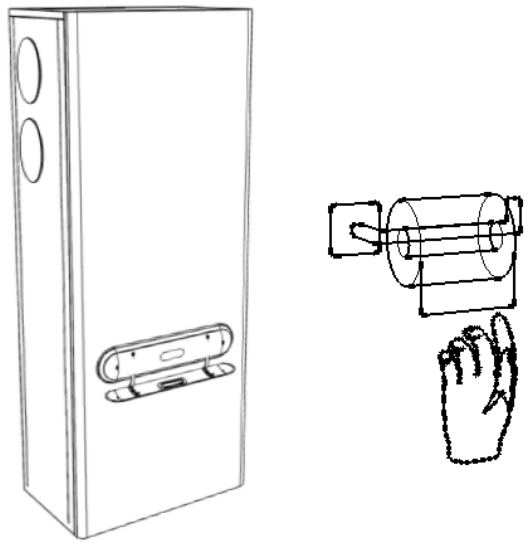

Views units for general cleaning

8 ALARMS

8.1.1 GENERALITY

In case of problems or failures, note the model and serial number of unit you have (present on the nameplate attached on the side of the unit) and contact the installer.

8.1.2 PROBLEMS WITHOUT ERROR INDICATION ON DISPLAY

Effect	**Causes**	**Remedies**
Notice is noise and turbulence coming from the hydraulic circuit	There is the presence of air inside the circuit.	Bleed air is generated by external devices that the vent on the tank inertia of the machine and bring the circuit to the correct load pressure. Check that the suction pressure (Return of the hydraulic circuit) to pump lit is greater than 0.6 BAR.
It is reached in a reasonable time the desired water temperature.	The thermal load is excessive. The pipes or the input grids and exhaust air are obstructed or too long resulting in a decrease of the volume of air	Check the system design and the number of terminals connected. Check the path of the pipes and the possible presence of obstacles proximity of expulsion grids and entry.
The machine vibrates abnormally	The anchors in the walls or in the positioning the floor is not correct. the pipes lack of flexible connections. The compressor has moved or the tubes are deformed during transport	Check the pipes do not go to force (transmitting vibrations) on parts of the frame.
The ventilation noise is excessive	There are slits at the entrance or along the air ejection pipes. are missing closure plugs of fittings.	Take good air piping to fittings present on the machine. Check that you've entered all well the closing caps on fittings not used.
There are leaks of water from the pipes ventilation	There have been no adequate drainages or air piping for the condenser have a length excessive	Check the joints between the various pipes and between the themselves and fittings on the machine. If the device is already in works by time, carry out a cleaning of the capacitor. Verify proper sizing of inlet pipes and expulsion air for the condenser
They come out a few drops of water from the grids external	There and good air circulation plant.	Isolate better ventilation pipes capacitor and control their inclines towards the collection points or drainage predispost

8.1.3 PROBLEMS WITH ERROR INDICATION ON DISPLAY

Code		Effect	Remedies
AL03	Flow	After the main switch on the microcomputer display the alarm appears E 03 (The first operation automatically after manual reset)	Check that: the valves interception are open, that the possible three-way valve for the hot-cold deviation both in correct position, that there are no bubbles air inside the circuit, which at least one of the users has the open circuit or It is equipped with three-way valve, that there both the external sieve filter clogged, which the system water pressure is correct, that the circulation pump functions regularly (possibly unlock).
AL06	High pressure from transducer	It has tripped high pressure transducer.	Make sure there is power Check that the water network piping of exhaust air and suction or outdoor grills are not blocked. If the device is already used by more than a year make a cleansing capacitor and a control operation of the recirculating cooling water and exhaust pumps
AL07	Low pressure transducer from	And 'it intervened the low pressure alarm Excessive amount of antifreeze in the circuit	Verify that the closing valves hydraulic circuit are open. To check that there is a good circulation of water (Absence of air in the system, valves deviation in the correct position, filters Sieve cleaner etc.). Check the charge the refrigerant. Make sure that the environments are not excessively cold (T <10 ° C) for the operation of the chiller. Check that the circuit has not been fed excessive amounts of antifreeze (exceeding 40%).
AL08	Lack for low pressure starter	E 'intervened the low pressure alarm during compressor start-up Excessive amount of antifreeze in the circuit	Verify that the closing valves hydraulic circuit are open. To check that there is a good circulation of water (Absence of air in the system, valves deviation in the correct position, filters Sieve cleaner etc.). Check the charge the refrigerant. Make sure that the environments are not excessively cold (T <10 ° C) for the operation of the chiller. Verify that the circuit has not been entered an excessive amount of antifreeze (exceeding 40%).
AL09	antifreeze	E 'intervened the temperature alarm Frost minimum. The outlet water temperature has dropped below 4 ° C.	Check that there is nothing that prevents good water circulation in the system (air, valves partially closed, sieve filter blocked etc.). Check the temperature difference between flow and return is between 4 ° C and 6 ° C . Check the correct positioning of the input probe verifying that the temperature on the display the controller is consistent with the inlet water temperature to the chiller.

AC01	compressor operating hours	Reporting compressors hour threshold	Only display for maintenance
AP01	plant pump operating hours	Signaling system pump hours threshold	Only display for maintenance
AP03	Pump operating hours PS	Signaling hours drain pump threshold	Only display for maintenance
AF01	Fan operating hours	Signaling hours fan threshold	Only display for maintenance
ES01	inlet temperature probe (user)	probe failure	Check the connection and eventually replace the probe
ES03	outlet temperature probe (user)	probe failure	Check the connection and if necessary replace the probe
ES10	condensing pressure transducer	probe failure	Check the connection and if necessary replace the probe
ES12	suction temperature probe	probe failure	Check the connection and if necessary replace the probe
ES13	evaporation pressure transducer	probe failure	Check the connection and if necessary replace the probe
ES15	auxiliary probe 1	probe failure	Check the connection and if necessary replace the probe
AL19	Alarm RTC unloading / broken	internal fault Clock	Resetting the time and date of the electronic control
AL21	EEV Alarm: Losh (low heat)	Low superheat expansion valve	Verify the operation of the EEV valve Verify refrigerant charge Verify probe Verify suction temperature low-pressure transducer
AL22	EEV Alarm: Hish (high heat)	Alto superheat expansion valve	Verify the operation of the EEV valve Verify refrigerant charge Verify probe Verify suction temperature low-pressure transducer
AL23	EEV Alarm: LOP	Minimum operating pressure expansion valve	Verify the operation of the EEV valve Verify refrigerant charge Verify low pressure transducer
AL24	EEV Alarm:	Maximum operating pressure expansion valve	Verify the operation of the EEV valve Check the inlet water temperature probe Verify Verify suction temperature low-pressure transducer
AL26	load valve Alarm	The floats are not activated and the unit reports the load valve alarm	Test the input presence of water Check the operation of the inlet valve
AL27	Maximum water level alarm	Taking Float Maximum water level	Verify the status of the central float Check the filling valve that does seep water
AL28	Minimum water level alarm	Taking the float minimum water level during normal operation	Test the input presence of water Check the operation of the inlet valve Verify that the drain pump is in the OFF;

9 NOTES AND INFORMATION SERVICE

NOTE

05-2018 rev.1

Technical Assistance Center

The data contained herein may be modified by the manufacturer without notice.